REFLECTIONS

Vol. L No. 3 Fall 2004

Georgia Performance Standards

The MATH Matrix Reloaded

K–2	Number and Operation	Algebra	Geometry and Measurement	Data Analysis
3–5	Number and Operation	Algebra	Geometry and Measurement	Data Analysis
6–8	Number and Operation	Algebra	Geometry and Measurement	Data Analysis
9–12	Number and Operation	Algebra	Geometry and Measurement	Data Analysis

Table of Contents

REFLECTIONS

Vol. L No. 3 Fall 2004

SPECIAL REFLECTIONS

REGULAR REFLECTIONS

Accountability – For What?

President's Desk

by Tom Ottinger
GCTM President
Elljay, GA
ottinger@ellijay.com

One of the most often heard buzzwords in education today is accountability. Students need to be accountable for learning. Teachers need to be accountable for teaching. Schools need to be accountable for educating their students.

Actually, accountability is a good idea. We in education should be able to show that we are accomplishing something with the millions of tax dollars we spend. The problem is how to determine what we have accomplished.

Certainly, there is no shortage of attempts to find out what teachers, schools, and school systems do.

In Georgia, all students are required to take the CRCT in grades 1 through 8, the ITBS in grades 3, 5, and 8, writing tests in grades 3, 5, 8, and 11, EOCT's in grades 9 through 12, and the GHSGT in grade 11. Results of these tests determine whether students pass classes, get promoted to the next grade, or graduate from high school.

They are also used to compare the quality of education at different schools and to rate school systems. Teachers are rightly concerned that the results may also be used to rate teachers. Testing is big business, but what does it really tell us?

People who want answers based on data typically want them fast, accurate, and cheap. It turns out that the most you can expect is two of these. In education, what we've got are results that are quick and cheap.

The CRCT, ITBS, EOCT's, and GHSGT are all multiple choice tests. They're relatively inexpensive to develop and administer. They can be scored easily so results theoretically can be provided quickly.

But they don't give us an accurate picture of what students know and can do. All they tell us is how well students do answering very short problems with clearly defined solution choices.

In the real world (that mystical place that school is supposed to prepare students for), it often takes considerable analysis just to determine if a problem exists. Then comes the difficult task of explicitly stating the problem.

The next step is to visualize what a solution would look like, assuming a solution exists.

Then we attempt to find a solution, or at least to come as close as possible. We check to see if our results make sense in the situation.

Testing is big business, but what does it really tell us?

Finally, we have to convince people that our result is actually the best solution possible.

The only thing our statewide testing program shows is whether students can find a solution.

It's not that the rest is unimportant; it's just not easy to test. However, it can be done.

The College Board's Advanced Placement Tests include a free response section with more extensive problems that have to be read and scored by human beings. It isn't cheap and it isn't quick, but it is pretty accurate.

States in Australia include something like this in their testing programs for all students, so it can be done on a large scale.

Accurate testing is just one component of the assessment that should be used for accountability. Student work, grades, and previous knowledge should be considered as well.

Real assessment is complicated and expensive, but if we really want "No Child Left Behind," isn't it worth it?

2004 Conference

Start Planning for the 45th Annual Georgia

by Cathy Franklin
Conference Chair
Columbus, GA
cfranklin@gctm.org

As chair of the 2004 GCTM Annual Conference and on behalf of the conference committee, I invite you to join us at Rock Eagle!

This year the conference theme is "Georgia Performance Standards: The Matrix Reloaded." You do not want to miss this conference!

Beginning on Thursday, we will have a keynote opening led by Keith Devlin, NCR's Mr. Math. He is also a well known author of many books which include:

- *The Millennium Problems: The Seven Greatest Unsolved Mathematical Puzzles of Our Time*
- *The Math Ge ne: How Mathematical Thinking Evolved &Why Numbers are Like Gossip*
- *Mathematics: The Science of Patterns*
- *Life by the Numbers*

He plans to speak to us twice, so mark your program. He will be speaking in the Auditorium.

This conference is going to be just what you need to begin thinking about how, when, why and what are the Georgia Performance Standards.

On Friday morning, leading us off in a keynote is another Californian, Phil Daro, who gave the teacher teams their charge as to what are performance standards and how this should drive a curriculum.

We will have a break out session for each grade level on the new curriculum at different times of the day in the auditorium. We are not offering any other grade-related sessions during this time.

Over 160 speakers will present a wide variety of opportunities for professional development for all grade levels, kindergarten through university.

The sessions and workshops encompass a variety of mathematical content areas, connections of mathematics to other content areas, technology, assessment, cooperative learning, and much more.

The GCTM Exhibit Hall will be filled with the latest mathematical publications, products, and technologies for you to view and/or try.

Several special events are planned for the conference, to enhance teachers' opportunities to network with each other.

Mark your program booklet so as to not miss out on all the fun!

We are excited about the program, exhibition, and special events we have planned for you at Rock Eagle.

We look forward to interacting with you there!

Sincerely,

Cathy Franklin
GMC 2004 Chair

A Bompart–ism . . .

Draw two parallel planes.

(see pg. 18)

You Don't Want to Miss. . .

The Outstanding Speakers

Mary Buck

Keith Devlin

Ivars Peterson

Doug Brumbaugh

Irina Lyublinskaya

David Rock

Phil Daro

Ellice Martin

Dottie Whitlow

Schedule Changes

Thursday

8:30–9:30 a.m.—Keynote Session: Keith Devlin

2:45–4:00 a.m.—Major Speakers: David Rock, Ellice Martin, Ivars Peterson

11:30 a.m.–12:00 p.m.—Regional Caucuses

Friday

8:30–9:30 a.m.—Keynote Session:Phil Daro

9:30 a.m.–4:00 p.m.—Sessions concerning the Georgia Performance Standards

Saturday

11:00 a.m.–12:00 p.m.—Closing Session: Dottie Whitlow, new GCTM President

Georgia DOE

Training is the Key

by Carolyn Baldree
Program Specialist
Georgia Department of Education
cbaldree@doe.k12.ga.us

Welcome back to a new school year and a new K-8 mathematics curriculum!! Yes, we are excited that the State Board voted in favor of the new standards.

Thank you, GCTM, for all your support throughout the curriculum writing process, and I am looking forward to a partnership with you throughout the training process. Training is the key that will determine the success of the new Georgia Performance Standards (GPS).

The State Board approved the content standards for K-8 on July 8th and will vote on the high school standards in the fall. The two-year implementation begins this fall with six grade. The Georgia Department of Education (GA DOE) will provide eight days of training during that time. Remember that the first year is a "training year" for teachers, and the students will not be held accountable for the new GPS.

There will be three days of training during the first year and two days during the summer. The remaining three days of training will occur during the second year of implementation. The GPS will not be taught in the classroom until the fall of 2005.

That means that the fifth graders this fall will be the first ones to be both taught and tested on the GPS. Fifth grade teachers will be asked to participate in the training with the six grade teachers.

All of the training will be content-based. The trainers will be teachers who have taught using performance standards. The first year of training will include instruction in many areas of mathematics. Understanding by Design is the model being used by the professional learning team. Scripted modules of the eight days of training will be given to systems. This is to ensure the consistency of instruction throughout the state.

The first day of training will include the following topics: performance standards; introduction of conceptual teaching and learning; correlation of the GPS to the QCC's and curriculum mapping; sample student work and teacher commentary.

The second day of training will involve instruction in how to develop a unit of study by using the content standards and elements. Teachers will become very familiar with the standards during this time. The next three training sessions will be a continuation of developing units with performance assessments. The second year's training will involve designing tasks, modeling research-based instructional strategies, developing rubics, and discussing the classroom challenges of implementing the new GPS.

> Training is the key that will determine the success of the new Georgia Performance Standards (GPS).

Eight days of training is not enough. Luckily, there are other opportunities for teachers to receive training. GCTM began this past summer with a Geometry Workshop for six grade teachers.

On October 14-16, they will sponsor a statewide conference in Rock Eagle that will have as its theme the Georgia Mathematics Performance Standards. The sessions will be very informative. I encourage every mathematics teacher to attend.

Several grants (PRISM, Technology Grant, Science/Mathematics Grant) are focusing on teacher training of the GPS. I hope that your school is involved in one of them.

This past summer several colleges began teaching the first of four courses required for the elementary mathematics endorsement. Statewide K-3 Reading and Math money could be used for further training.

Opportunities are out there-seek them out! It will take the entire state working TOGETHER to ensure the success of this curriculum.

Let's do it—Our students deserve the very best!

Remember my contact information-Carolyn Baldree-404-651-7273 or cbaldree@doe.k12.ga.us.

If I can assist you in any way, please contact me.

Performance Learning Units

Executive Director

by Larry Elbrink
Executive Director
Waycross, GA
lelbrink@gctm.org

It is time to be making plans to attend the Georgia Mathematics Conference held annually at the Rock Eagle Center, Eatonton, GA.

This year there will be something new that may be of interest to many of you [especially those who need to renew their certificate].

During this last year the Georgia Department of Education instituted a replacement for the Staff Development Unit (SDU) option for certification renewal. The replacement is referred to as Professional Learning Unit (PLU) and has essentially the same rules.

For some time, GCTM has been working to become a PLU provider. The Georgia Council of Teachers of Mathematics is pleased to announce that GCTM is in the final (we need only to receive the formal letter of approval) stage of becoming a provider of Performance Learning Units [formerly known as SDU credits].

This will mean that individuals attending the Georgia Mathematics Conference this October 14 – 16, 2004 will be eligible to receive PLU credit through the Georgia Council of Teachers of Mathematics. In order to be eligible for PLU credit, conference participants must turn in a completed Prior Approval Form at the PLU desk at registration upon arrival at the conference.

Please remember that ten (10) contact hours are required for one (1) PLU credit. Typically 1 – 2 PLUs might be earned by attending 10 or 20 contact hours at the conference. There will be no cost to members of GCTM. Non-members will be charged $10 per unit for processing.

Individuals must have prior approval from their school system to receive PLU credit. The Prior Approval Form must be signed by the appropriate system administrative personnel authorized to approved PLU credits.

The Prior Approval Form and instructions for completion may be downloaded from the GCTM website (it should be posted by the middle of August) or you may request a form via mail from Dr. Larry C. Elbrink, Executive Director, 857 Tebeau Street, Waycross GA 31501.

The Council is pleased to offer this as an additional service to members. GCTM membership dues at $20 continue to be a BEST BUY.

The Georgia Council of Teachers of Mathematics is pleased to announce that GCTM is in the final stage of becoming a provider of Performance Learning Units.

A Bompart–ism . . .

If $8/0 = \infty$, what is $5/0$?

$$\frac{8}{0} = \infty \qquad \frac{5}{0} = 5$$

(see pg. 18)

In Memorium

Dr. Billy Earl Bompart

by Cheryl Hughes & Tom Ottinger

Dr. Bill Bompart, a longtime leader in GCTM, passed away on August 11, 2004. He was 70 years old. Born in Dallas, Texas, Bill was perhaps best known for his sense of humor, as shown in the following:

Problem: Reduce 3/4

Answer: 3/4

He had given many presentations at the Georgia Math Conference and had also presented for NCTM at conferences all over North America.

Until his retirement a few years ago, Bill was vice president for Academic Affairs at Augusta State University where he came in 1967. He chaired the ASU Department of Mathematics and Computer Science from 1983-1988.

Dr. and Mrs. Bompart

Dr. Bompart received a bachelor's degree from the University of Texas; master's degrees from Southwestern Baptist Theological Seminary and North Texas State University, and his doctoral degree from the University of Texas at Austin.

At the time of his death, Bill was serving as a trustee of GCTM's Mathematics Education Trust.

Bill had been an important part of GCTM for many years as he supported our organization in many ways. He will be greatly missed.

In our next issue we would like to honor Dr. Bompart. If you have special memoires of him, please send via email to Cheryl Hughes, editor, at hughesgctm@yahoo.com.

Al's Web Sites

4 Teachers: www.4teachers.com

On this site you will find links to educational sites categorized by subject area and school management. Start here to find hidden treasures.

Rubistar: rubistar.4teachers.org/index.php

This remarkable web site contains a tool to help you design a rubric for your next assessment. Using this facility you can also use a template provided for you, see other rubrics, create and save your own.

Kidsbank: www.kidsbank.com

Money and children come together on this web site. The Java version is best with animation and sound.

Free Math Tests: www.rbechtold.com/math-prior-01.html

When you visit this site you will see a checklist of options for creating tests using the 4 basic operations. This tool is limited, but free!

Skewl Sites: www.skewlsites.com/math.htm

This site links you to math project sites, some of which are designed for students, and some for teachers. Be sure to check out each one. Scroll down for the ones applicable to the upper grades.

THE HUMAN EQUATION: "Babbage & the Silver Lady"

Math History

by Keith Luoma
Augusta State University
kluoma@augusta.edu

In the waning years of the 18th century a wide variety of street merchants and entertainers lined England's streets. One of these, a man named Merlin, entertained the crowds with a pair of cleverly constructed foot-tall silver automatons.

These "silver ladies," as they were known to the public, dazzled their audiences with precisely engineered movements. One would walk along gracefully, pausing occasionally to bow; another carried a lifelike bird that flapped its wings.

One particularly entranced young member of the audience would later write in his memoirs that "the motions of [their] limbs were singularly graceful," and their "eyes were full of imagination, and irresistible."

The young man, Charles Babbage, who lived from 1791 to 1871, would grow up to be one of England's most versatile thinkers. Mathematics, religion, even railroads and lighthouses, were just some of his many interests. But he is chiefly remembered today for the mathematical machines that he attempted to construct—forerunners of the modern computer.

> After much work and mechanical ingenuity, Babbage drew up plans for a small working computer, which he dubbed the Difference Machine.

But for the moment it may be interesting to consider whether the graceful automatons had any influence on his later work.

The fact that, as an old man of seventy, he would write about them in his delightful autobiography, *Passages from the Life of a Philosopher,* suggests that he considered his encounters with them important.

From their graceful, human-like moves, Babbage may have first gotten the idea that machines could duplicate at least some of the functions of human beings. He must have been similarly impressed by the engineering skill needed to create these automatons.

Babbage began a promising career in mathematics, and was even elected to the Lucasian Chair at Cambridge University, a post once held by Isaac Newton.

But at the age of 21, while he was perusing a book of mathematical tables, a friend asked him what he was thinking.

"Why," he replied, "I am thinking that all these tables might be calculated by machinery."

After much work and mechanical ingenuity, Babbage drew up plans for a small working computer, which he dubbed the Difference Machine. With a turn of the crank it could perform a variety of mathematical functions by processing repeated additions.

Although Babbage built a small working model of the Difference Machine, he soon saw that it could be improved upon. The machine he envisioned, the Analytical Engine, would be able to perform any mathematical function.

He made careful blueprints for its construction, but due to inadequate funding and a lack of technology it was never completed. In theory, though, it could perform many of the same operations as a modern computer.

Charles Babbage was destined to cross paths once again with the automatons of his youth. As an adult he came across one of them at an auction.

Without hesitation, Babbage purchased the Silver Lady, and then eagerly took it home to examine the mechanical works.

He was disappointed to find that the assembly was apparently the result of trial and error, with many abandoned holes drilled into the mechanism.

He compared this with the careful study and planning that had gone into his own work. However, whereas the Silver Lady was fully functional, his Analytical Engine remained unrealized.

At home, Babbage delighted in displaying the Silver Lady with his own inventions. With amusement he noted that at one party a large group of Englishmen gathered around the Silver Lady, while a pair of foreign scientists eagerly studied his Difference Machine.

Although Babbage's countrymen may not have appreciated the importance of his work, today he is honored as a pioneer of the computer revolution.

Math History

Sparks Ignite When History & Mathematics

by Trisha Abston
Woodland Middle School, Euharlee

Education is a dynamic force, constantly evolving to fit the needs of a changing world. One of the newer trends is a push towards integrating subject matter across the curriculum, as can be evidenced in the NCTM process standard that emphasizes connections (NCTM, 2001). NCTM asserts that students can connect mathematical ideas by relating mathematics to other subjects, and "when students can connect mathematical ideas, their understanding is deeper and more lasting." It can sometimes be challenging to incorporate mathematics with humanity-based subjects such as literature and history. However, through the use of biographies and history lessons, it is possible to show the human side of mathematics. Students enjoy listening to and reading stories about the early mathematicians and will often beg for such stories during math class. Students need to experience real-world and mathematical applications for the concepts they are exposed to in their textbooks. As Heddens and Speer say, "The textbook is not the centerpiece of a lesson; the students and the blending of content and activities should be. The teacher's task is to masterfully orchestrate these variables" (2001). Blending literature with math activities, I have created the following lessons. These lessons can be used alone, or incorporated into a preexisting unit.

LESSON 1: Right Triangles – The Secret Meeting of the Pythagoreans

Start the lesson by reading a biography on Pythagoras and the Pythagoreans such as the following:

Pythagoras was a man who lived from about 580-500 B.C. Little is known about Pythagoras, but he was supposedly born on the Aegean island of Samos. He left the island around the age of 18 to go study. He is said to have wandered in Phoenicia, Egypt, and Babylonia. He reappeared at the age of 50 after wandering many, many years. When he had reappeared, Pythagoras decided to start a school. It was quite different from the schools we have today. His school was a secret society. The school regulated what the people ate and drank and their way of life.

Pythagoras divided his students into two groups. There were the listeners (acoustici) who had to listen to the math from behind a curtain without talking. Then there were the mathematici. After being a listener for three years, the students could be inducted into the inner circle and become mathematici. Now women at this time were forbidden by law from attending public lectures, but they were allowed to listen to Pythagoras.

Pythagoras taught by word of mouth. His members were not allowed to share information to any outsiders. In fact, one of the Pythagoreans was once drowned in a shipwreck, supposedly for sharing information. The Pythagoreans had strange initiations and customs. One symbol they used was a five-pointed star or pentagram. It identified a person as a Pythagorean (Burton, 2003).

Pythagoras divided his students into two groups. There were the . . . *acoustici* . . . [and] the *mathematici*.

Inform the students that they will be having a secret Pythagorean meeting to discuss Pythagoras's famous theorem. Have students cut a star out of construction paper that they can wear or hold. The star will remind them of the symbol of the Pythagoreans. They will have to show their star to Pythagoras (the teacher) before entering the secret meeting place. Have the students sneak to the secret meeting place.

This secret meeting place can be anywhere. I used a parking lot and taught with sidewalk chalk. At the secret meeting place, introduce Pythagoras's theorem and discuss how to find a missing side of a right triangle using this theorem. Have students practice a few of their own problems.

End the lesson with discussing a few questions in a circle such as why the Pythagoreans may have met in secret, why women were allowed to listen, and how Pythagoras's theorem might be useful to us today.

LESSON 2: Greatest Common Factors – Using Euclid's Algorithm to Find GCF

Have the students practice finding greatest common factors by ways previously taught in class such as factor trees. Then have students try to find the GCF of larger numbers such as 3052 and 1236. After students have either successfully found the GCF or are frustrated and have given up tell students about Euclid and his strategy for finding the GCF of any two numbers.

> Euclid also came up with his own way for finding the greatest common factor of a number.

Begin with the following reading:

Euclid was considered one of the greatest geometers of the past. Euclid was born approximately 323 B.C and lived to be almost 40 years old. He is known most for his book called "The Elements." In his book he collected all of the other mathematicians' (especially those who had previous findings about geometry) ideas and arranged the ideas so they would make sense and be useful to others.

Many other well known mathematicians have studied his books and later made their own contributions to mathematics. Euclid also came up with his own way for finding the greatest common factor of a number. His method is called the Euclidean algorithm (Burton, 2003).

The Euclidean algorithm begins with a division problem, placing the bigger of the two numbers inside the division sign. First, divide the two numbers. Then another division problem is created using the remainder as the new divisor and the old divisor as the new dividend. This process continues until there is no remainder. When a division problem is obtained that has no remainder, the divisor of that problem is the GCF (see Figure 1).

Show students a few examples of the Euclidean algorithm. Then have students start practicing this method using smaller numbers and working their way up to the bigger original problems.

Close the class by doing the original problem together and have students discuss when this method would be useful opposed to the other methods they have studied.

LESSON 3: Multiplying Larger Numbers – Napier's Bones

Start this lesson also with reading John Napier's biography:

John Napier lived from 1550-1617. He lived in Scotland, where he began his studies. Napier lived during the time when the Calvinist Protestantism faith was established. The Protestants were in great conflict with the Catholic Church, and Napier strongly defended his Protestant faith. In fact, in one of his books, he attacked the Catholic Church and said that the Pope in Rome was the anti-Christ.

Napier was known for being witty. In one story, Napier discovered that one of his servants had been stealing from him. Napier was said to have used a black rooster to find out who was stealing from him. He told his servants to go into this room with the rooster one by one and to stroke the rooster. He said that the rooster knew who was guilty and would crow when the guilty servant stroked the rooster's back. So the servants went in one by one and stroked the rooster. What they didn't know was that Napier had put black soot on

the rooster so that anyone who would touch the rooster would have black hands. The thief would be the one with the clean hands because he did not touch the rooster in fear that the rooster would crow.

Napier invented a way to multiply large numbers that is often known as Napier's bones. The bones consisted of blocks of wood or bones. Napier's bones are not generally used still today. However, the method is similar to our own method for multiplying numbers (Burton, 2003).

Napier invented a way to multiply large numbers that is often known as Napier's bones.

Explain to the students that they will be making Napier's bones and using them to multiply. Students will begin by constructing the bones. This activity works best in small groups of 3-5 students. Each group will need markers, paper, pencils, and strips of card stock. (Card stock can be substituted with 2 x 4 pieces of sanded wood if available for a great outdoor activity.) The strips of card stock will be the bones.

First have students make eight equally spaced horizontal lines down all of the bones. Then draw a diagonal line across each small box from lower left to upper right. Have the students number the bones from 1-9 at the tops of the card stock strips. Then have students take each of the bones and write the multiples of the top number down the bones.

The tens digit of each multiple should be placed to the left of the diagonal line, and the ones digit to the right of the diagonal line. Now Napier's bones are finished.

I like to have my students work out a problem with Napier's bones first, and then check their answers by multiplying out the numbers on paper. Pick a number for the students to multiply. Let's say 263 x 45. Students will follow a few simple steps to multiply.

First select the bones with the 2, 6, and 3 on the top for 263. Line the bones up next to each other in order (see Figure 5). Then find the row 4 and row 5 on the bones since we are multiplying by 45. Row 4 would have the numbers 8, 2, 4, 1, 2. Notice that 8 and 2 are inside the same diagonals, and 4 and 1 are inside the same diagonals. Any time numbers are inside of the same diagonals, they will be added together (see Figure 6).

If there is a number to carry, it will be carried into the diagonal to the left (just like regular addition). So, when the row 4 is added together, we get the number 1052. When the numbers 1, 0, 3, 0, 1, 5 are added together in row 5, we get the number 1315. 1052 and 1315 are known as partial products.

When all of the partial products are obtained, add them together, paying attention to the placement of the original number (for us 45).

The partial product of row 4 should be lined up with the partial product of row 5 just like regular multiplication.

The number 1315 should be placed on top with the number 1052 underneath, slid one digit to the left (see Figure 7). This sliding results because the 4 is the number of tens in 45. (So the first 1 of 1315 should be over the 0 of 1052).

When the partial products of are added together, the sum is 11,835. This is the answer for our original problem.

Lead the students through a few more examples and then have them practice on their own.

End the lesson by having the groups discuss with each other, and then the teacher why Napier's method for multiplying works and how it is similar to our own modern method of multiplication.

Lesson 4: Finding Area and Perimeter – The Rope Stretchers

Start with the following reading and then start the activity:

Geometry comes from the two Greek words meaning "earth" and "measure." Most historians believe that geometry came about as a necessity for land surveying. The Greek historian Herodotus said that the king divided his land among all of the Egyptians. Each year, the Egyptians would have to pay taxes according to

how much land they possessed. However, each year during the rainy season, it would rain so much that the Nile River would flood over. Then the Egyptian land owners could not tell where their land began and ended. Therefore, these specialists would come along and measure everyone's land again. These specialists became known as the rope stretchers because their main tool for measuring the land was a rope with knots tied at equal intervals along the rope. Thus, geometry got its name from measuring the land, or earth (Burton, 2003).

Inform the students that they will be rope stretchers today. Find a place ahead of time outside, such as a football field, where students have a big area to work. I used small groups again for this activity of about 3-4 students per group. Each group had a ball of yarn and found several rocks to hold down the yarn. Have the groups use the yarn to measure out the Egyptians' land again. (They first need to start by tying knots in their ropes at equal intervals. Actual size of the plots will depend on how far apart their knots measure.) I gave my students about 6 measurements and a piece of land to measure. The measurements I gave my students were 4x5, 2x7, 3x7, 5x5, 3x2, and 2x2.

Their measurements of the land that they were allowed to use were 5x18. The students could not go outside their given piece of land and thus had to use the land wisely. Students must first measure out the land, and then find the area and perimeter of each piece of land. My students eyed the right angles, but if a group is more advanced, you may want to have them use 3-4-5 triangles to establish the right angles. This activity takes about two hours, depending on the ability level of the students. Afterwards, have the groups walk around to other groups and compare measurements, including perimeters and areas. Then discuss with the students how perimeter and area are related to each other. (The closer the measures of the sides of the perimeter are together, the larger the area. For example, a perimeter of 18 could have sides of 4x5 or 2x7, but the sides 4x5 would yield the bigger area.)

Geometry comes from the two Greek words meaning "earth" and "measure."

These four lessons are only a few examples of using the history of mathematics to embellish middle school mathematics. As readers plan a lesson on a particular topic, they may want to find out about mathematicians who made contributions to that topic. In addition to college texts on mathematics history (Beringhoff & Gouvea, 2002; Katz, 2000; Lewinter & Widulski, 2002; Suzuki, 2002), there are wonderful activity books (Gonzales, Mitchell, & Stone, 2001) geared toward the middle-grades learner.

These resources will help teachers tell such stories as Archimedes' cry of "Eureka!" and Gauss' surprising his teacher with his quick method of adding the first 100 counting numbers. The history of mathematics is filled with interesting stories waiting to be told – stories of a young lady studying mathematics on the wallpaper in her house, a woman submitting her work under a male pseudonym, and pages of mathematics being written the night before a duel. Our students need to hear these stories so that they can appreciate what has transpired in the remarkable development of mathematical thought.

Special thanks to Dr. Carla Moldavan for her contributions to this article.

REFERENCES

Berlinghoff, W.P., & Gouvea, F.Q. *Math through the Ages: A Gentle History for Teachers and Others.* Farmington, Maine: Oxton House Publishers, 2002.

Burton, David. *The History of Mathematics* (Fifth Edition). Boston: McGraw Hill, 2003.

Gonzales, N. A., Mitchell, M., & Stone, A.P. *Mathematical History: Activities, Puzzles, Stories, Games.* Reston, VA: National Council of Teachers of Mathematics, 2001.

Heddens, James and William Speer. *Today's Mathematics: Activities and Instructional Ideas* (10th Edition). New York: John Wiley & Sons, Inc., 2001.

Katz, V., Editor. *Using History to Teach Mathematics: An International Perspective.* Wash-ington, D.C.: The Mathematical Association of America, 2000.

Lewinter, M. & Widulski, W. *The Saga of Mathematics: A Brief History.* Upper Saddle River, NJ: Prentice Hall, 2002.

National Council of Teachers of Mathematics (NCTM). *Principles and Standards for School Mathematics.* Reston, Va: NCTM, 2000.

Suzuki, J. *A History of Mathematics.* Upper Saddle River, NJ: Prentice Hall, 2002.

www.agnesscott.edu/lriddle/women/women.htm

www.maths.tcd.ie/pub/HistMath/People/RBallHist.html

www.ncsu.edu/midlink/vy/vymath.htm

math.furman.edu/~mwoodard/mquot.html

www.geom.uiuc.edu/~dpvc/talks/StOlaf.95-10/labs/History/History.html

mathforum.org/~judyann/calendar/

www-groups.dcs.st-and.ac.uk/~history/BiogIndex.html

members.tripod.com/jeff560/index.html

"TODOS"

Mathematics for English Language Learners

by Cheryl Hughes
GCTM Council Publications Editor
chughes@gctm.org

One of the newest organizations affiliated with NCTM is called TODOS. The name itself comes from the Spanish word "todos" derived from the Latin word "totus" meaning "whole or entire."

It is also the source for the French word "tout" and the English word "total" both signifying "all inclusive."

The mission of TODOS is to "advocate for an equitable and high quality mathematics education for all students, in particular Latino/Hispanic students, by advancing the professional growth and equity awareness of educators."

The goal of the organization is, therefore, to make teachers of mathematics aware of the special needs of English Language Learners (ELL) in their classrooms, and to provide those teachers with the appropriate tools with which to teach these students yet another language—that of mathematics.

Mathematics is portrayed in books and movies as a universal language, one that can be comprehended by any intelligent, even extraterrestrial, being.

But, every language has its own vocabulary, for that is the essence of language. ELLs who are trying to learn mathematics are doubly frustrated, so it is vital that math teachers who encounter ELLs communicate clearly and consistently, and provide scaffolding for students to access the language.

Someone once said that "extraordinary circumstances require extraordinary measures," and so it is with ELLs.

They must understand the words and terms used in mathematical concepts, in other words, they must build a working vocabulary that is both English and mathematical.

Elementary students may need the reinforcement of visual representation of a term or concept as it is learned. As the ELL may not understand the oral and/or written English explanation of the new concept while it is being taught, she will need concrete examples to reinforce the vocabulary and operations.

Then, they will need clear and precise models to practice.

Moreover, they will need written and oral repetitions—perhaps many more than non-ELLs—to be sure they completely understand the new vocabulary.

Secondary students, by virtue of their previous education received in their native language, may know basic mathematical concepts, but not basic mathematical vocabulary as taught in an English-speaking environment. It is advisable, therefore, for the conscientious math teacher to take some time to create a vocabulary list of concepts already learned by their ELLs and indicating the applicable English word or symbol for that concept.

Since teaching is an audible exercise, ELLs not only need to be able to read the new vocabulary but hear and understand it when spoken in class.

A sensitive math teacher will speak each term several times, in order for their ELLs to recognize them by sound, as well as by sight.

The mission of TODOS is to "advocate for an equitable and high quality mathematics education for all students, in particular Latino/Hispanic students, by advancing the professional growth and equity awareness of educators."

The teacher will also provide many opportunities for discussion, student with student as well as student with teacher, to increase oral language fluency.

Once a vocabulary list is established, ELLs and the teacher can work together and create a large vocabulary chart for the wall of the room for instant reference by both the teacher and ELLs. A small, convenient version of the word list should also be made to go inside their book with space to add additional terms as they are presented in class.

It is imperative that teachers, across all grade levels, are consistent in their use of mathematical terminology so ELLs will not become confused.

If there are several terms for the same operation or concept, all of these should be included on the vocabulary chart.

Each term should be explained as it is developed.

Speak the words while you do the operation, so they connect the two.

A useful resource is a peer tutor, one who fluently speaks both the ELL's mother tongue, as well as English. However, peer tutors should be used sparingly, or the ELL may become dependent upon him/her and not learn the new vocabulary.

Instead of listening to the teacher, they may wait for the peer to translate for them.

Assessment is inevitable and unavoidable. It is one of the strongest indicators a teacher has of evaluating a student's level of understanding.

Test the concepts needed, but with modification for language for the ELL student.

Understandably, word problems might be difficult for ELLs, so a different approach may be needed. Reading word problems aloud or illustrating the problem may make a significant difference in their testing performance.

Test instructions should not be taken for granted. Instructional verbiage should be consistent with that used in class and on homework prior to the test.

As a result of a growing population of English Language Learners in Georgia, *Reflections*, throughout the school year, will address the problems and possibilities of teaching mathematics to ELLs.

We hope you find these suggestions helpful and that you will write and tell us about your successes and the techniques you used to achieve your results.

http://www.todos-math.org/

Writers Needed

The *Reflections* staff is seeking articles on issues of interest to teachers of mathematics in Georgia.

Please submit your article electronically in Microsoft Word, including your name, title, email address, school, and a phone number where you can be reached. Include work site at the end of your article, as well as any recommended web sites and readings.

Manuscripts relatred to the themes on page 22 will be given priority, but articles on any facet of mathematics education will be considered.

High resolution electronic phototographs (jpeg or tiff), original artwork, or examples of student work to accompany articles would also be welcomed. If submitting student work or pictures of students, be sure to include a statement that permission for publication from the students and their parents is on file at the school.

Submissions and queries should be emailed to Cheryl Hughes at hughesgctm@aol.com.

Workshops

Making Presentations

by Michael Clemmons
Jordan Vocational High School
mclemmons@gctm.org

While hard work and good ideas are essential to success, your ability to express those ideas and get others to join you is just as important.

Much of this will be one on one or in small groups but there will be times you will be involved in more formal and public speaking in front of larger numbers.

If this thought makes you nervous you are not alone. Many speakers lack the skills and confidence to make effective presentations. We have all been victims of speakers who put us to sleep.

Knowing how ineffective many speakers are, many of us have found that, despite the best intentions, we haven't fared much better. We knew the topic and the ideas were written down, but the presentation still didn't go well.

Knowing how ineffective many speakers are, many of us have found that, despite the best intentions, we haven't fared much better.

Was it the way you delivered the presentation?

Was it because the audience didn't seem interested?

Teachers especially need to share ideas with their peers. If you have an activity or a different way of presenting a task, I would encourage you to present at one or more of our conferences.

I would have never believed ten years ago, when I gave a fifteen minute required presentation at Rock Eagle, that I would be presenting to over five hundred people at the Southeast Regional Mathematics Conference this year.

As you can see we all have to start somewhere at sometime. So why not now?

Below I have listed some suggestions that may assist you in making your presentations.

Preparation

1. Gather information about the audience.
2. Identify a way of starting that will grab the audience.
3. Make a brief outline.
4. Structure the session in a logical and intriguing way.
5. Include divergent viewpoints, if appropriate.
6. Break your material into short sections so there are opportunities for questions and discussion.
7. Create transitions for helping the audience move from one segment to another.
8. Build in variety, surprise, and changes of pace.
9. Make sure that you won't be overwhelming the audience with information.
10. Prepare yourself so you can adapt to unexpected events and needed changes.
11. Identify and make arrangements for audiovisuals and other resources.
12. Make sure you know how to use any equipment needed during your presentation.
13. Have a plan for monitoring the time.
14. Develop a conclusion related to the purpose of the presentation.

Once this phase has been completed prepare yourself by observing other presentations and reflect on previous presentations that you have heard. Practice your presentation in front of someone else. If no one is available you may want to audiotape or videotape yourself. Attempt to improve weak areas. Ask for help from a professional.

Making the Presentation

In the Beginning

1. Be sure to introduce yourself, but give only background/qualifications related to the subject your presenting.
2. Relax and enjoy yourself. If you're not having a good time, the audience probably won't either.
3. Gather more information on your audience. It is critical to be clear about your purpose in the presentation. This involves knowing your audience, the occasion, and the expectations of the audience.
4. Project a sense of purpose, be positive and enthusiastic.
5. Capture the audience's interest. Tell them the purpose of your session. Tailor your message to the audience – understand their needs, desires, knowledge level, attitude toward your topic.
6. Make eye contact. Create an atmosphere of trust.

The Delivery

1. Use your whole body to communicate when necessary. Use gestures naturally; do what is natural to you: some gestures are wrong – jingling change in a pocket, toying with notes, shifting from one foot to the other.
2. Avoid distracting dress and mannerisms. You want the audience to focus on what you have to say rather than on you. It is important to think about anything that might detract from your message.
3. Vary the pitch and volume of your voice.
4. Look at the audience before you start. Ask yourself why they came, and adapt your presentation to meet their needs.
5. Look at the audience while you speak. Talk to them rather than at them.
6. Respect the audience. Don't talk above their heads, and don't talk down to them either. Watch their reactions. If they get bored, do something unexpected to catch their attention.
7. Know your audiovisuals and training aids well. Be prepared for technical difficulties. Powerpoint or transparencies are powerful tools when used correctly. Slides need to be easily read, not too busy and remember the audience can probably read. Don't read slides verbatim to the audience.
8. Ask questions and wait for a response. Encourage participation. Avoid rhetorical questions – ask interesting questions that are thought provoking but not too difficult to answer - ask some open ended questions with no right or wrong answers - encourage sharing experiences, feelings, opinions, put "you" elements into questions. Prepare some key questions prior to the presentation.

Finish It

1. Monitor the time.
2. Summarize, invite feedback, end the presentation with energy.

Finally, the more you present, the better you will get. Teachers need to share information that has made them successful so that we may all become better at what we do. I invite you to make a proposal for next October's Georgia Mathematics Conference at Rock Eagle. You may also make a proposal for the Second Annual Southeast Regional Mathematics Conference in February at South Effingham Middle School in Effingham County. You can find information on submitting a proposal at www.gctm.org. Remember, the best presenter you have ever seen had to present for a first time somewhere.

Assessment

Some of Georgia's Best Mathematics

by Carla C. Moldavan
Associate Professor of Mathematics Education
Berry College
Rome, GA
cmoldavan@berry.edu

Since 1969, congressionally mandated surveys of the educational achievement of American students have been conducted in the form of the National Assessment of Educational Progress (NAEP). The National Council of Teachers of Mathematics prepares and disseminates interpretive reports based on the results of the NAEP mathematics assessment (Kinney and Silver, 1997). In this Reflections article, the performance of some of Georgia's best mathematics students is compared to the national performance at higher grade levels on released items from the sixth mathematics assessment conducted in 1992.

The Georgia students involved participated in mathematics competitions sponsored by Berry College in the fall of 2003. Fifteen schools, mostly from the Northwest Georgia region, brought teams of sixth-graders. Each school brings four team members and is allowed to bring up to four alternates. The data in this article only includes the performance of the four team members.

The written portion of the mathematics contest includes twenty multiple-choice questions that students are given twenty minutes to complete. Students are not allowed to use calculators.

For the fall, 2003, written test twelve of the released 1992 NAEP items were used. The sixth-graders performance was compared to the national performance of eighth-graders. On ten of the items the mathematics competition students performed at a higher level than the national sample of eighth-graders. On these ten items the sixth-graders averaged having 17.9% more of the students getting an item correct than the percent of eighth-graders getting the corresponding item correct. The differences in percent of students getting the item correct (comparing sixth-graders to eighth-graders) ranged from 3% to 35.7%. On the two items for which more of the eighth-graders got the questions correct, the differences in the percent of students in the two groups getting the questions correct were 5.3% and 3%. Overall, on all twelve items the sixth-graders averaged having 14.2% more of the students getting the questions correct than the eighth-graders.

The items are given below and show the percent of eighth-graders of the national sample getting the question correct as well as the percent of the mathematics competition sixth-graders getting the question correct. Correct answers are denoted with asterisks.

1. Of the following which is closest in value to 0.52?
   a) 1/50
   b) 1/5
   c) ?
   d) 1/3
   e) ?*

   NAEP 8th-graders: 51% correct
   Mathematics competition 6th graders: 86.7% correct

2.

Puppy's Age	Puppy's Weight
1 mo.	10 lb.
2 mo.	15 lb.
3 mo.	19 lb.
4 mo.	22 lb.
5 mo.	?

   John records the weight of his puppy every month in a chart like the one shown above. If the pattern of the puppy's weight gain continues, how many pounds will the puppy weigh at 5 months?
   a) 30
   b) 27
   c) 25
   d) 24*

   NAEP 8th-graders: 66% correct
   Mathematics competition 6th graders: 95% correct

3. In a bag of marbles, ? are red, ? are blue, 1/6 are green, and 1/12 are yellow. If a marble is taken from the bag without looking, it is most likely to be:
   a) red*
   b) blue
   c) green
   d) yellow

   NAEP 8th-graders: 73% correct
   Mathematics competition 6th graders: 96.7% correct

4. A rectangular carpet is 9 feet long and 6 feet wide. What is the area of the carpet in square feet?
   a) 15
   b) 27
   c) 30
   d) 54*

   NAEP 8th-graders: 65% correct
   Mathematics competition 6th graders: 88.3% correct

5. By how much would 217 be increased if the digit 1 were replaced by a digit 5?
   a) 4
   b) 40*
   c) 44
   d) 400

   NAEP 8th-graders: 72% correct
   Mathematics competition 6th graders: 88.3% correct

6. Christy has 88 photographs to put in her album. If 9 photographs will fit on one page, how many pages will she need?
   a) 8
   b) 9
   c) 10*
   d) 11

   NAEP 8th-graders: 69% correct
   Mathematics competition 6th graders: 85% correct

Students—How are They Doing?

7. What is the difference between the smallest positive 3-digit number and the largest positive 2-digit number?
   a) 1*
   b) 9
   c) 10
   d) 90
   e) 900

   NAEP 8th-graders: 58% correct
   Mathematics competition 6th graders: 73.3% correct

8. A certain reference file contains approximately one bil lion facts. About how many million is that?
   a) 1,000,000
   b) 100,000
   c) 10,000
   d) 1,000*
   e) 100

   NAEP 8th-graders: 22% correct
   Mathematics competition 6th graders: 35% correct

9.

A	B
5	9
13	8
17	?

   If the pattern shown in the table were continued, what number would appear in the box at the bottom of Column B next to 14?
   a) 19
   b) 21
   c) 23
   d) 25
   e) 29*

   NAEP 8th-graders: 25% correct
   Mathematics competition 6th graders: 28.3% correct

10. There were 50 hamburgers to serve 38 children. If each child is to have at least one hamburger, at most how many of the children can have more than one?
   a) 6
   b) 12*
   c) 26
   d) 38

   NAEP 8th-graders: 92% correct
   Mathematics competition 6th graders: 95% correct

11. Children's pictures are to be hung in a single line so that pictures next to each other share a tack. How many tacks are needed to hang 28 pictures in this way?
   a) 27
   b) 28
   c) 29*
   d) 56

   NAEP 8th-graders: 48% correct
   Mathematics competition 6th graders: 45% correct

12. Which of the following is both a multiple of 3 and a multiple of 7?
   a) 7,007
   b) 8,192
   c) 21,567*
   d) 22,287
   e) 40,040

   NAEP 8th-graders: 77% correct
   Mathematics competition 6th graders: 71.7% correct

In a separate mathematics contest also hosted in the fall of 2003, seventh- and eighth-graders were given a twenty-question multiple-choice exam that used nine released items from the sixth NAEP assessment.

The mathematics contest middle-schoolers out-performed 12th grade students in the NAEP sample on six items. These items included the topics of measurement, area, angles, order of operations, and evaluating expressions.

On these six items the mathematics contest students averaged having 23.2% more of the students getting the questions correct. The differences ranged from 7.6% more getting the question on slope correct to 40.4% more getting the question on order of operations correct.

The questions on which NAEP 12th-graders outperformed the middle school mathematics competition students included ones on percent application (2% difference in performance), distance between two points (8.4% difference), and exponents (7.7% difference).

Overall, the average showed that 13.4% more of the seventh- and eighth-graders got the released NAEP items correct than the 12th-graders.

NAEP has provided a descriptive model for mathematics achievement in U. S. schools. It is informative to know what to expect of the performance of students at various ages and grade levels.

To analyze items which require conceptual understanding and problem-solving is particularly enlightening. Perhaps Georgia teachers will want to try some NAEP items with their own classes.

For additional items, teachers can go to nces.ed.gov/nationsreportcard. Georgia's best students have provided evidence that they are able to answer questions at a higher rate of correct responses than students of the national sample who are ahead of them two to five grades.

Reference:

Kinney, P. A. and Silver, E. A., Editors. (1997). Results from the Sixth Mathematics Assessment of the National Assessment of Educational Progress. Reston, VA: The National Council of Teachers of Mathematics.

NCTM President

Is Your Affiliate the Parent's Best Friend?

by Cathy L. Seeley
President, National Council of Teachers of Mathematics

The National Council of Teachers of Mathematics (NCTM) recently identified political advocacy and public outreach as one of its strategic priorities. As the Council ramps up its efforts to inform and influence policy decisions at all levels, another important need has emerged—parent outreach and support. If NCTM is to be a public voice for education, then we must focus on how we can communicate with and support parents and caregivers.

Support for parents is especially important when your school is implementing a new program or trying to improve the program it has. Often, students bring home materials and homework that look different from what parents are used to seeing. Suddenly, they may be asked to conduct a survey or struggle with a non-routine problem. Parents or caregivers, wanting to do the right thing to support their children, can become frustrated when faced with mathematics that looks unfamiliar.

At the same time, many families are noticing an increase in the amount of time students are expected to spend at home on their schoolwork. This increased expectation is inevitable. We continue to hear that the United States falls short in international comparisons of students' mathematics performance, and in response to this concern many districts and states have raised their expectations for what every student should learn. The No Child Left Behind Act has exacerbated this trend by calling for high-level mathematics for all students at all grade levels.

NCTM has taken a few steps to reach parents over the years. Most recently, the Council developed Figure This! for middle school students and their families. These materials, which are now maintained on a Web site (www.figurethis.org) and available as a CD through the NCTM Catalog, are excellent and have been well received. Beyond this broad outreach, however, the best place to reach parents is in their own backyard.

> **If NCTM is to be a public voice for education, then we must focus on how we can communicate with and support parents and caregivers.**

How can you help families help their students? If your Affiliate is involved in parent outreach efforts, please communicate these efforts to your Affiliate's leadership and NCTM representative. Whether you have already done such activities or are just beginning to think about what you might do, here are a few suggestions to stimulate discussion at the next meeting of your Affiliate:

Consider producing a guide to understanding your state's standards and/or assessment program in simple, understandable terms.

This should emphasize that the best way for students to do well on a test is to study a comprehensive and balanced mathematics program at school, not just one that includes test preparation, but one that really builds a foundation of understanding as well as skills.

Share ideas for how parents can help students. Teachers can always generate home activities that support good mathematics learning.

These can be presented in a brief, general brochure or more comprehensively by grade level bands. It is important that parents know there are things they can do. For example, it is always useful for parents to help students practice facts at home, provided the facts are built on understanding the operation behind them. This is especially true when the school

program is balanced and comprehensive, but it may not allow as much practice time as parents might wish. At the same time, there are many family-oriented activities, such as working together on setting the table (showing one-to-one correspondence, matching, counting, and patterns) or dealing with fundraising activities that can broaden parents' involvement in home mathematics. There are many sources for such ideas that accompany textbooks or can be found on various Web sites.

Use a Web site for your Affiliate to communicate with parents as well as with educators.

If you don't already have a Web site, consider developing one. This is not hard to do with available software and with the growing number of people (including students) who can do this. If you already have a Web site, think about including a Parents section.

Provide links to parent resources from locally adopted textbooks or programs.

Many textbooks or curriculum programs have resources for parents available through their Web sites. Your Affiliate might identify these links for the programs used in your area, as well as any links to support provided by local districts or higher education institutions.

Sponsor a family math event at a local mall.

Especially where your Affiliate may encompass one or more school districts, consider hosting a math carnival or math event of some kind. Personally invite parents to participate in the planning and presentation of the event.

Offer to write a column in the newspaper on mathematics.

A periodic column (monthly, bi-monthly, etc.) about mathematics, the state test, homework, etc. can be a great tool for outreach. The task of writing such a column could be done by one person or shared by a team. Be positive and informative. And be sure to include, "Provided as a service to the community by the …Council of Teachers of Mathematics, an Affiliate of the National Council of Teachers of Mathematics."

Regardless of the approach you take, a local professional group of mathematics teachers—your Affiliate—can become the Parent's Best Friend. Share your projects with us through your NCTM Affiliate Representative so that we can publicize your successes and share your ideas with others.

Building relationships on an ongoing basis and not waiting for a crisis will help us to be seen as an expert public voice about mathematics teaching and learning. What's more, families and communities can benefit from your efforts. But the real winners will be your students as they learn deeper and stronger mathematics, supported by help from the classroom and the home.

Cathy L. Seeley, President
National Council of Teachers of Mathematics

New: Prizes

Cranium Crackers for Students

K–2

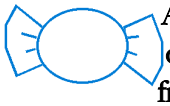

Ashley had $5. She bought 3 different kinds of candy. One kind was $2.15, one was $1.45 and the other was $1.67. How much change did she get from the store keeper?

Grades 3–5

Your parents have decided make a commitment to give you money for your birthday every year for the next 20 years. The problem is that you must decide today, your 10th birthday, how much you wish to receive for the next 20 years. These are your choices:

1—You can have a silver dollar today, 2 silver dollars next year, 3 the next year, and so on, for the next 20 years.

2—You can have a dime today, two dimes next year, four times next year, and 8 dimes the next year, doubling the number of dimes every year for the next 20 years.

Which plan will give you the most money if you save all of it for the next 20 years? How do you know?

Grades 6–8

Create 3 magic squares, one 3 x 3, one 4 x 4, and one 5 x 5. Use any numbers less than 50, and do not use any numbers more than once. Be sure your sum is consistent on the horizontal, vertical and diagonal. Note the sum of each magic square.

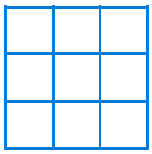

Grades 9–12

In the equation below, each letter represents a different digit.

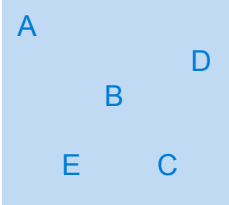

$$A^5 + B^5 + C^5 + D^5 + E^5 = ABCDE$$

What is the ABCDE ?

NEW: Cranium Cracker for Teachers

New: Challenge

PROBLEM:

Engineers want to build a highway from one city (A) to another (B), a distance of 1,012 miles (D). The highway will be 30 feet wide (E) and will be perfectly flat. Assuming points A and B lay on the curvature of the Earth and that the radius of the Earth is 4,000 miles (R), calculate the depth of the cut at the mid-point (C) and the volume of Earth that will be removed.

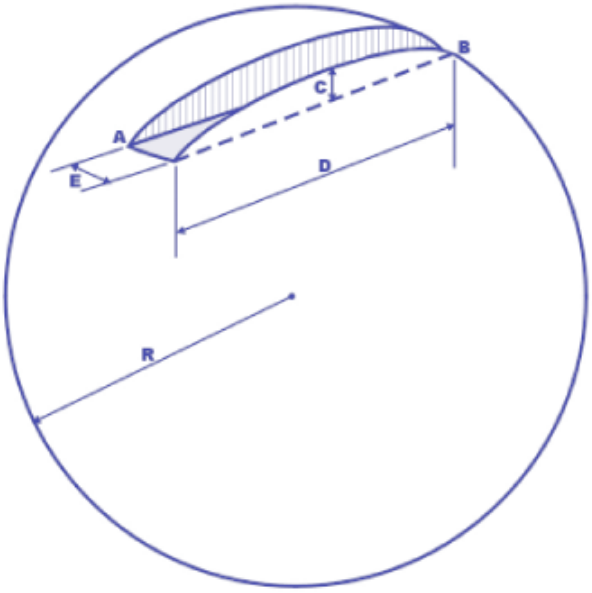

Submission Guidelines

TEACHERS:

Your students will see your name and school in print when you solve this problem correctly. E-mail your solutions to Cheryl Hughes at hughesgctm@yahoo.com.

STUDENTS:

1. Each student should print neatly at the top of their paper: His/Her Name, Teacher's Name, Grade, School.
2. Submit one answer per student and one student per page.
3. All students whose answers are correct will see their names listed in the next issue of REFLECTIONS. They will also receive a special prize from their teacher.
4. Some students, whose work is submitted in each category, may have their work published in the next issue of REFLECTIONS. To be selected for publication, the student's work muse be creative, correct, and legible. With their work must be a release signed by their parent or guardian, saying: "This work of my son/daughter, _____, may be published in REFLECTIONS, the quarterly publication of the Georgia Council of Teachers of Mathematics, with my child's name, grade, and school."
5. Send to: Mrs. Cheryl Hughes, Landmark Christian School, 50 W. Broad Street, Fairburn, GA 30213.

Membership Report

Don't Be Retiring About GCTM Membership

by Susan Craig
Membership Director
Augusta, GA
scraig@gctm.org

Retirement! ..well, semi-retirement time has come for me. So, I have spent time this spring and summer cleaning out the many things one acquires over one's teaching career. As I looked at files, I found nearly every one contained some entry from a session attended at our Georgia Mathematics Conference. More importantly, most had become the activities I used on a regular basis in my daily classroom instruction. My membership in GCTM has had a positive and profound effect on my career as a mathematics teacher and in turn, on my students and, I hope, on my colleagues. I have to thank Dr. Bill Bompart for his leadership and inspiration in impressing on me, as an undergraduate, the importance of membership in local, state, and national mathematics teacher councils. I cannot imagine my career without having been a member of GCTM and NCTM.

> My membership in GCTM has had a positive and profound effect on my career as a mathematics teacher.

We can all enumerate some of the tangible advantages of being a GCTM member – Reflections, our newsletter and journal, our excellent conference at Rock Eagle, ready information available on our dynamic web site – www.gctm.org, staff development opportunities, regional conferences, several grant and award opportunities. The intangible benefits are just as important. They include the innumerable and lifelong friendships begun at Rock Eagle or other training sessions and meetings; the positive outcomes from interactions with the State Department, district supervisors, and legislators; the satisfaction of knowing that being a member of my professional organization is an essential part of being a professional educator.

All of us know of these benefits of membership. With the benefits come some obligations. We are all obliged to share these benefits with others and encourage, if not insist upon, their membership as well. So, let's all make some new year resolutions!

Teachers, resolve to bring at least one colleague into GCTM upon your return to school this fall.

Department, team, and grade leaders, share the benefits of GCTM with your colleagues. Include a membership form in your materials at your first meeting of the year.

District supervisors, encourage all of your school mathematics leaders to join personally and then to encourage their colleagues to become members. When meeting with new teachers, particularly, discuss with the importance of this professional organization!

University faculty, consider your personal membership as a priority for the new academic year. If you are a mathematics education supervisor, encourage membership among your prospective teachers.

Copy the membership form from the back of this issue of Reflections or download the form from the website. Share it with the mathematics educators you know. Then, followup in a few days to show how important their membership is to you and GCTM.

I look forward to an avalanche of new memberships in the coming month!

HAVE A GREAT NEW YEAR!

Coming Up in *Reflections . . .*

December

Data Analysis & Authentic Problems

Web Sites / Web Resources that Cost

April

Summer Suggestions & Technology in the Mathematics Classroom

Missing in Action

GCTM Membership

Since the beginning of GCTM, our membership roster has changed year by year. Sometimes members forget to inform GCTM of their change of address, so we lose contact with them. The list below contains former members whose addresses are no longer correct. If you have any current information about these former members, please contact GCTM through the website, www.gctm.org, or by mail at the address on the back of this publication. Each member, former and current, is important to our organization.

Anniston, AL: Ericka Kelley
Aiken, S.C.: Edwin T. Thomas

Adairsville: Kristy A. Mann
Albany: Melodie L. Hervey
Sabrina Stephens
Athens: Jacquelyn M. Mixon
Margaret Norton
Atlanta: Katharine M. Taylor
Denisse L. Samuels
Marquetta Graves
Augusta: Laura Cox
Linda Green
Austell: Erica Greene
Carollton: Vickie Freeman
Jennifer M. Muse
Conyers: Susan Mann
Covington: Linda Lacoste
East Point: Nikita Anderson

Elbert Cty: Linda Lester
Forsyth: Barbara Cain
Jennifer D. Rivers
Gainesville: Donna S. Smith
Greenville: Reginald Spence
LaGrange: Grace S. Bruce
Lithonia: Bernadine A. Chaple
Tanecia N. Raphael
Brenetta N. Lewis
Macon: Margaret E. Iverson
Christina L. Downer
Julie T. Reams
Mayme R. Johnson
Shelman Burton
Marietta: Melissa K. Carlon
Martinez: Ginny Bentley
Joyce A. Range
Julie Sisson
Monica Smith

Milledgeville:
Alisha Knotts
Morrow: Jennifer N. Vaters
Perry: Karen Mertens
Rose C. Ellis
Remerton: Chantil Davis
Rincon: Nelwyn M. Cade
Roswell: Margaret Drummer
Savannah: Willie Smith
Smyrna: Jessica Dawson
Stone Mountain:
Pamela C. Thornton
Nancy Owston
Thunderbolt: Jessica L. Church
Thomaston: Kristi Bosworth
Warner Robins:
Jane F. Wilson
Woodstock: Belinda Bessenger

Current Membership Statistics
(as of July 2004)

	North West	North East	Central West	Central East	Metro West	Metro East	South West	South East	Out of State	Total
Life	28	494	70	68	89	41	42	69	14	470
Exp 2004	63	76	215	118	207	306	122	84	1	1192
Exp 2005	8	11	25	22	21	24	11	15	0	137
Exp 2006	0	0	0	1	1	0	0	0	0	2
Student	7	6	42	77	24	8	0	2	0	166
Totals	106	142	352	286	342	379	175	170	15	1967

GCTM Executive Committee 2003–2004

Be sure to indicate "GCTM business" in the subject box when sending an e-mail to Executive Committee members. Note that Executive Committee members have new e-mail addresses.

President
Tom Ottinger
14 Sprice Drive
Ellijay, GA 30540
706.276.2375
tottinger@gctm.org

President Elect
Dottie Whitlow
235 Peachtree Street
North Tower, Suite 1700
Atlanta, GA 30303
770.313.2735
dwhitlow@gctm.org

NCTM Representative
Christine Thomas
College of Education
Georgia State University
30 Pryor Street
Atlanta, GA 30303
404.651.0200
cthomas@gctm.org

Executive Director
Larry Elbrink
857 Tebeau Street
Waycross, GA 31501
912.285.7676
912.287.6650 fax
lelbrink@gctm.org

V.P. for Awards/Honors
Judy Chambers
355 Hampton Road
Fayetteville, GA 30215
770.461.4471
jchambers@gctm.org

V.P. for Competitions
Debbie Poss
2406 Woodbridge Drive
Marietta, GA 30066-2158
770.924.2065
dposs@gctm.org

V.P. for Constitution & Policy
Don Slater
2406 Woodbridge Drive
Marietta, GA 30066-2156
770.924.2065
dslater@gctm.org

V.P. for Regional Services
Missy Walker
115 Carrington Park
Jonesboro, GA 30326
770.478.1892
mwalker@gctm.org

V.P. for Advocacy
Jacquie Allison
2262 Overton Road
Augusta, GA 30904
706.736.7422
jallison@gctm.org

Secretary
Cindy Fielder
2322 Glenpark Court
Marietta, GA 30064
678.361.4397
cfielder@gctm.org

Treasurer
Dan Funsch
2819 Peach Orchard Road
Augusta, GA 30906
706.793.9663
dfunsch@gctm.org

Webmaster
Bryson Payne
5489 Highway 19N
Dahlonega, GA 30533
706.864.0855
bpayne@gctm.org

Council Publications Editor
Cheryl Hughes
50 W Broad Street
Fairburn, GA 30213
770.306.0647
chughes@gctm.org

2004 Conference Chair
Cathy Franklin
Jordan Vocational High School
3200 Howard Avenue
Columbus, GA 31904
cfranklin@gctm.org

Membership Director
Susan Craig
1011 Stewart Avenue
Augusta, GA 30904-3151
scraig@gctm.org

Regional Representatives

Northwest:
Vivian Stephens
1001 Cascade Drive
Dalton, GA 30720
706.278.7662
vstephens@gctm.org

Metro West:
Ishan Malik
818 Willis Mill Road SW
Atlanta, GA 30311
404.753.3641
imalik@gctm.org

Central West:
Shepard Sawyer
6644 Springlake Drive
Columbus, GA 31909
ssawyer@gctm.org

Southwest:
James Drazdowski
202 Starmount Drive
Valdosta, GA 31605-6455
229.249.0895
jdrazdowski@gctm.org

Northeast:
Steve Hadaway
5098 Bird Road
Gainesville, GA 30506
770.535.8086
shadaway@gctm.org

Metro East:
Lynda Luckie
723 Hi Hope Road
Lawrenceville, GA 30043
lluckie@gctm.org

Central East:
Amber Donnell
920 Highway 80E
Dublin, GA 31027
478.272.3144
adonnell@gctm.org

Southeast:
Mike Clemmons
1200 Noel Conoway Road
Guyton, GA 31312
912.728.7500
mclemmons@gctm.org

Membership Form

Georgia Council of Teachers of Mathematics

Name_____ Date_____

Mailing Address_____

City_____ Zip_____ E-mail_____

Home Phone_____ Work_____

Indicate your GCTM region: ❑ NW ❑ NE ❑ CW ❑ CE ❑ MW ❑ ME ❑ SW ❑ SE

MEMBERSHIP CLASSIFICATION

PreK-12

Position (Grade Level)_____ School_____

System_____

Post Secondary

University/College/Techinical Institute_____

Position_____

Student Membership

College/University_____ ❑ Jr. ❑ Sr.

❑ New GCTM Membership Number_____

❑ Renewal GCTM Regular Membership ($20) $_____

GCTM Life Membership ($400) $_____

GCTM Student Membership (Juniors & Seniors only) FREE

GCTM Affiliate $_____

My Contribution to Georgia Mathematics Education Trust $_____

Applicant's Signature (required)_____

Mail to: Susan Craig, GCTM Membership Director, 1011 Stewart Ave., Augusta, GA 30904-3151

The 45th Annual Georgia Mathematics Conference

sponsored by GCTM

October
14 – 16
2004

Rock Eagle 4-H
Campground
Eatonton,
Georgia

See www.gctm.org for details

REFLECTIONS

is an official publication of the
Georgia Council of Teachers of Mathematics

GCTM Corporate Office
857 Tebeau Street
Waycross, GA 31501
912.285.7676

Presorted
Standard
U.S. Postage
PAID
Atlanta, GA
Permit #4227